# C-Series Display
## Installation Manual

Document Number: 87020-3
Date: March 2006

## Trademarks and registered trademarks

# Important Information

## Intended use

This handbook provides information and instructions to assist in planning and installing your Raymarine C-Series Display, together with information that will be useful when you are connecting the C-Series Display to other equipment.

In order to obtain the best results in operation and performance, please read this handbook thoroughly.

## Safety notices

**WARNING:Navigation aid**
**This product is intended to be used as an aid to navigation. Its accuracy can be affected by many factors, including equipment failure or defect, environmental conditions and incorrect handling or use. It is the Users responsibility to exercise common prudence and navigational judgement. This device should not be relied upon as a substitute for such prudence and judgement.**

**WARNING:Product installation**
**This equipment must be installed in accordance with the instructions in this handbook. Failure to do so could result in poor product performance, personal injury and/or damage to the vessel.**

DANGER
High voltage

**WARNING:Electrical safety**
**Make sure the power supply is switched off before making any electrical connections.**

**WARNING:Electromagnetic energy**
**The radar scanner transmits electromagnetic energy. Ensure that the scanner has been installed according to the recommendations given in the relevant scanner handbook.**

**WARNING:Fishfinder sounder module**
**Removing the transducer cable from the rear of the fishfinder sounder module whilst it is switched on can cause sparks. Only remove the transducer cable after power has been switched off. Ensure that the sounder module is mounted where it is well ventilated and in an area free from flammable vapors.**

**CAUTION: Radar Scanners, Cables & Installation**
**Information on radar scanners, cables and their installation contained in this handbook supersedes that contained in the Pathfinder Radar Scanner Handbook, Document No. 81154_8, dated 12th January 2005.**

**CAUTION: Bezel Installation**
**After installing the front bezel, check that all buttons and softkeys have passed through the bezel completely and are free to operate correctly.**

**CAUTION: Global Positioning System Antenna**
**Do not connect or disconnect the GPS antenna from the display unit whilst power is switched on. Doing this may result in irreparable damage**

**CAUTION: Water Ingress**
**To prevent the ingress of water and damage to the display, ensure that the chart card door is firmly closed. This can be confirmed by an audible click.**

**CAUTION: Connections into the display**
**Ensure power is switched off prior to connecting or removing any cables into the rear of the display. Failure to do so can cause irreparable damage.**

**CAUTION: CompactFlash Card Installation**
**When installing CompactFlash cards ensure that the card is being fitted the correct way round. DO NOT try and force the card into position as this may result in irreparable damage to the card.**

**CAUTION: CompactFlash Cards**
**Removing the CompactFlash card whilst information is being written to it may cause damage to the card and loss of all data. A warning on the display indicates when writing is in progress.**

**CAUTION: Chart and CompactFlash card damage**
**DO NOT use a metallic instrument such as a screwdriver or pliers to help you remove a card, as doing this can cause irreparable damage to the card and/or display unit.**

## EMC Conformance

All Raymarine equipment and accessories are designed to the best industry standards for use in the recreational marine environment.

The design and manufacture of Raymarine equipment and accessories conform to the appropriate Electromagnetic Compatibility (EMC) standards, but correct installation is required to ensure that performance is not compromised.

# Handbook information

To the best of our knowledge, the information in this handbook was correct when it went to press. However, Raymarine cannot accept liability for an inaccuracies or omissions it may contain.

In addition, our policy of continuous product improvement may change specifications without notice. Therefore Raymarine cannot accept liability for any differences between the product and the handbook.

# Disposal

### Waste Electrical and Electronic Equipment (WEEE) Directive

The WEEE Directive requires the recycling of waste electrical and electronic equipment. Whilst the WEEE Directive does not apply to some of Raymarine's products, we support its requirements as part of our environmental policy and we ask you to be aware of how you should dispose of this product.

The crossed-out wheelie bin symbol found on our products signifies that it should not be disposed of in general waste or landfill.

Please contact your local dealer, national distributor or Raymarine Technical Services for information on product disposal.

# Contents

# Chapter 1: Preparation for installation

## 1.1 General information

### Contents of this pack

The C-Series (C70, C80 or C120) Display pack contains the following items:

| Item | Quantity | Part No. | | |
|---|---|---|---|---|
| | | C-70 | C-80 | C-120 |
| C-Series Display | 1 | 5566-001 | 5579-001 | 5579-003 |
| Display Bezel | 1 | R08001 | R08002 | R08046 |
| Trunnion Bracket | 1 | R08020 | R08020 | R08020 |
| Trunnion Bracket knobs | 2 | W145 | W145 | W145 |
| Panel mounting seal | 1 | R08015 | R08026 | R08037 |
| Sun cover | 1 | R08019 | R08019 | R08019 |
| Trim ring | 1 | R08021 | R08021 | R08021 |
| Power Cable (1.5m) | 1 | R08003 | R08003 | R08003 |
| NMEA cable (1.5m) | 1 | R08004 | R08004 | R08004 |
| SeaTalk/Alarm out cable (2m) | 1 | R08050 | R08050 | R08050 |
| No.10 x 3/4" Pozi-drive screws for Trunnion Bracket | 3 | 21238 | 21238 | - |
| M4 x 8 Pozi head | 4 | 21284 | 21284 | 21284 |
| M4 x 30 Pozi head | 4 | 21339 | 21339 | 21339 |
| Scotchlock connectors | 3 | 07453 | 07453 | - |
| Documentation pack including:<br>Reference Manual<br>Installation Manual<br>Operating Guide<br>Flush Mount Template | <br>1<br>1<br>1<br>1 | 84169_6 | | |

**Note:** *To prevent damage, unpack the display carefully. Save the carton and packing, in case the unit has to be returned for service.*

# Dimensions

The dimensions for your C-Series display are:

## C70 Display

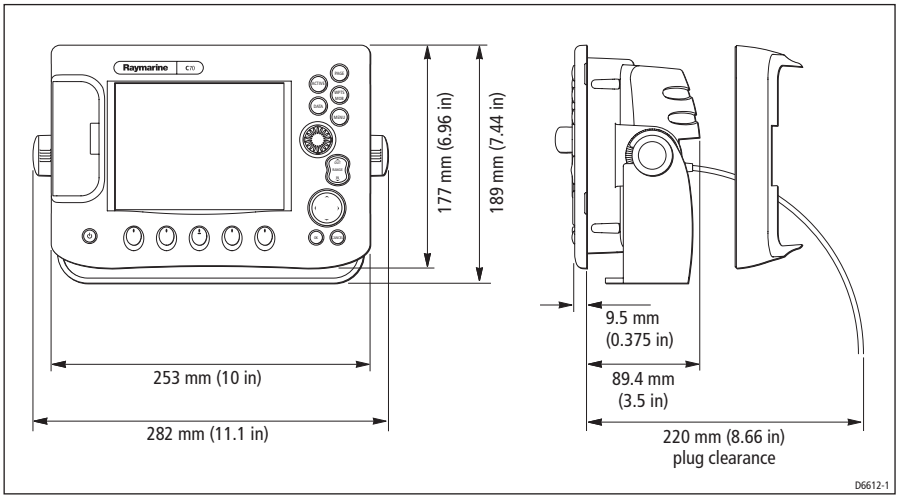


## C80 Display

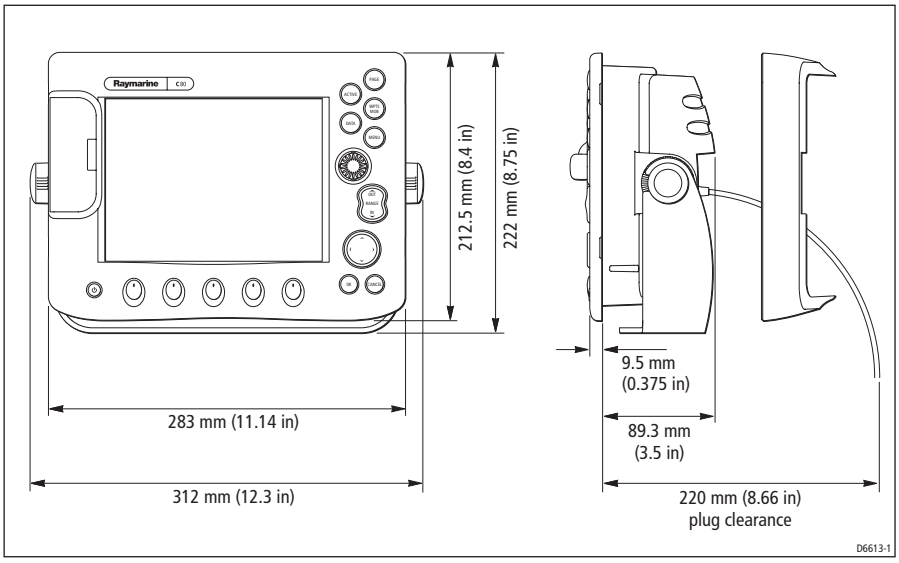

## C120 Display

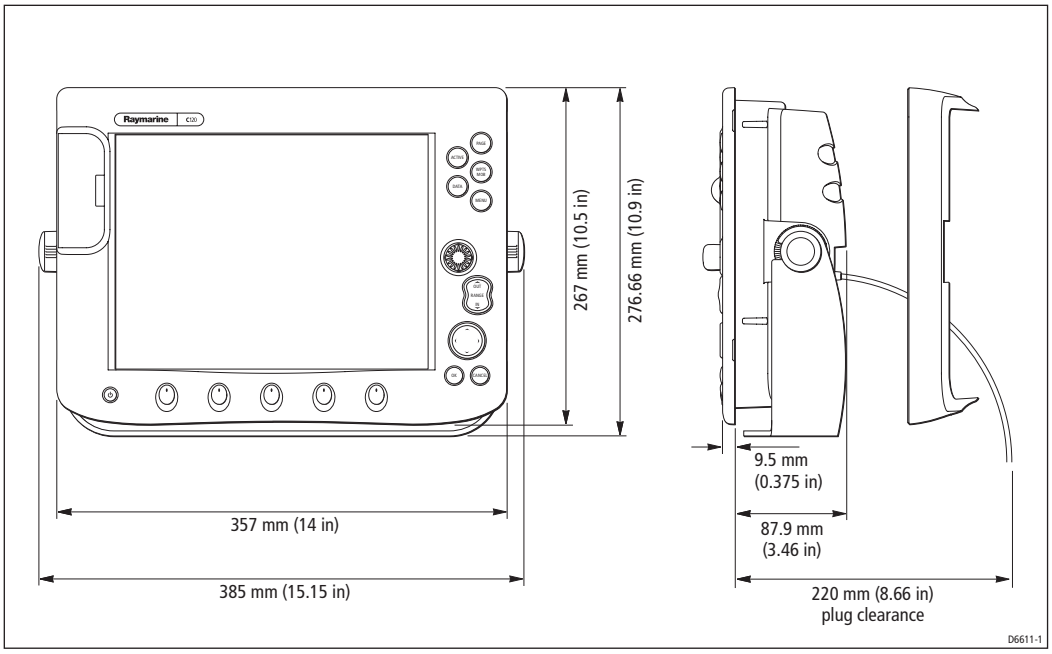


## Accessories and spares

Raymarine accessories and parts can be obtained from your authorized Raymarine dealer. However, if you are in need of an item not available from the retailer or you are uncertain what item to choose for your Display, please contact Raymarine direct (see *page 46*). Alternatively, please refer to our website: www.raymarine.com

## 1.2 Planning the installation

This section provides information and advice for planning the installation of your Display.

### EMC Installation Guidelines

All Raymarine equipment and accessories are designed to the best industry standards for use in the recreational marine environment.

Their design and manufacture conforms to the appropriate Electromagnetic Compatibility (EMC) standards, but correct installation is required to ensure that performance is not compromised. Although every effort has been taken to ensure that they will perform under all conditions, it is important to understand what factors could affect the operation of the product.

The guidelines given here describe the conditions for optimum EMC performance, but it is recognized that it may not be possible to meet all of these conditions in all situations. To ensure the best possible conditions for EMC performance within the constraints imposed by any location, always ensure the maximum separation possible between different items of electrical equipment.

For **optimum** EMC performance, it is recommended that **wherever possible**:

- Raymarine equipment and cables connected to it are:
  - At least 3 ft. (1 m) from any equipment transmitting or cables carrying radio signals e.g. VHF radios, cables and antennas. In the case of SSB radios, the distance should be increased to 7 ft. (2 m).
  - More than 7 ft. (2 m) from the path of a radar beam. A radar beam can normally be assumed to spread 20 degrees above and below the radiating element.
- The equipment is supplied from a separate battery from that used for engine start. Voltage drops below 10 V, and starter motor transients, can cause the equipment to reset. This will not damage the equipment, but may cause the loss of some information and may change the operating mode.
- Raymarine specified cables are used. Cutting and rejoining these cables can compromise EMC performance and must be avoided unless doing so is detailed in the installation manual.
- If a suppression ferrite is attached to a cable, this ferrite should not be removed. If the ferrite needs to be removed during installation it must be reassembled in the same position.

### Suppression Ferrites

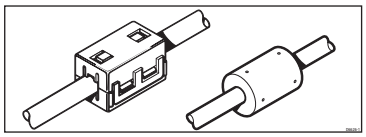

The illustration shows typical cable suppression ferrites used with Raymarine equipment. Always use the ferrites supplied by Raymarine.

**Connections to other equipment**

If your Raymarine equipment is to be connected to other equipment using a cable not supplied by Raymarine, a suppression ferrite MUST always be attached to the cable near to the Raymarine unit.

## Where should the Display unit be located?

Your C-Series display can either be flush-mounted or mounted using the trunnion bracket supplied.

Before you install the display, plan its installation, considering:

- **Convenience**: The contrast and colors seen on all Liquid Crystal Displays (LCD) vary slightly with viewing angle and are best viewed perpendicular to the display. The mounting location should be easily accessible to allow operation of the front panel controls. Avoid installing where excessive reflection will occur in normal use.
- **Access**: There must be sufficient space behind the display to allow cable connections to the rear panel connectors, avoiding tight bends in the cables.
- **Interference**: The selected location should be far enough away from devices that may cause interference, such as motors, generators and radio transmitters/receivers (see EMC Guidelines).
- **Magnetic compass**: Mount the display at least 3ft (1m) away from a magnetic compass.
- **Cable runs**: The display should be mounted as near as possible to a Direct Current (DC) power source. All cables should be adequately secured, protected from physical damage and excessive vibration. Avoid running cables through bilges or doorways, or close to moving or hot objects.
- **Environmental**: The display should be protected from physical damage and excessive vibration. Although the display unit is waterproof, it is good practice to mount it in a protected area away from prolonged and direct exposure to rain and salt spray. The rear of the display should be in a well ventilated space to ensure air circulation to the rear of the unit.

## EMC Conformance

Always check the installation before going to sea to make sure that it is not affected by radio transmissions, engine starting etc.

# Chapter 2: System Integration

## 2.1 Introduction

This chapter provides an overview of system integration, you may find that your system does not use all the protocols or contain all the instrumentation that is described in it. However it is hoped that the information supplied will help in your understanding of how systems can be integrated and used successfully.

## 2.2 What is System Integration?

System integration enables various instruments and displays to communicate with each other and use the collected data to increase the functionality of the system.

This data exchange is only possible if the data gathering is accurate, and transfer between instruments is fast and accurate.

Fast and accurate data transfer is achieved by using a combination of the following data protocols:

- SeaTalk.
- SeaTalk$^2$.
- National Marine Electronics Association (NMEA)0183.
- NMEA 2000.

### What is SeaTalk?

#### SeaTalk

The SeaTalk protocol enables compatible instruments to be connected by a single cable carrying power (12 volts, 150 mA) and data in/out, without a central processor.

Additional instruments and functions can be added to a SeaTalk system, simply by plugging them into the network. SeaTalk equipment can also communicate with other non-SeaTalk equipment via the NMEA 0183 standard, provided a suitable interface is used.

#### SeaTalk$^2$

SeaTalk$^2$ is an enhanced replacement for SeaTalk and is a proprietary extension to NMEA 2000 and the proven CAN bus technology. It enables other Raymarine SeaTalk$^2$ devices to talk to each other, whilst maintaining near transparent NMEA 2000 compatibility.

## What is NMEA?

### NMEA 0183

The NMEA 0183 Data Interface Standard was developed by the National Marine Electronics Association of America. It is an international standard to enable equipment from many different manufacturers to be connected together and share information.

The NMEA 0183 standard carries similar information to SeaTalk. However it has the important difference in that one cable will only carry information in one direction. For this reason NMEA 0183 is generally used to connect a data receiver and a transmitter together, e.g. a compass sensor transmitting heading to a radar display.

This information is passed in 'sentences', each of which has a three-letter sentence identifier. It is therefore important when checking compatibility between items that the same sentence identifiers are used:

- VTG - carries Course and Speed Over Ground data.
- GLL - carries latitude and longitude.
- DBT - carries water depth.
- MWV - carries relative wind angle and wind speed data.

### NMEA 2000

NMEA 2000 offers significant improvements over NMEA 0183, most notably in speed and connectivity. Up to 50 units can simultaneously transmit and receive on a single physical bus at any one time, with each node being physically addressable.

The standard was specifically intended to allow for a whole network of marine electronics from any manufacturer to communicate on a common bus via standardized message types and formats.

# 2.3 Compatibility

## Radar Scanners

**CAUTION: Radar Scanners, Cables & Installation**
**Information on radar scanners, cables and their installation contained in this handbook supersedes that contained in the Pathfinder Radar Scanner Handbook, Document No. 81154_8, dated 12th January 2005.**

To achieve full radar compatibility with your C-Series Display, your Raymarine radar scanner may require upgrading. Please check the list below to see if this upgrade is required.

The scanner serial number can be found on a label attached to the scanner casing:

| Scanner type/model | Serial Number | Compatibility |
|---|---|---|
| **2Kw Radome - Pathfinder** | 1220000 and below<br>1220001 - 0530157<br>0530158 and above | Not compatible<br>Upgrade required<br>Fully compatible |
| **2Kw Radome - RD218** | All | Fully compatible |
| **4Kw Radome - Pathfinder** | 1220000 and below<br>1222001 - 0530246<br>0530247 and above | Not compatible<br>Upgrade required<br>Fully compatible |
| **4Kw Radome - RD424** | All | Fully compatible |
| **4Kw Open Array** | 1030000 and below<br>1030001 - 1230143<br>1230144 and above | Not compatible<br>Upgrade required<br>Fully compatible |
| **10Kw Open Array** | 0430000 and below<br>0430001 and above | Not compatible<br>Fully compatible |

The Open Array system will also require a split pedestal cable.

If your radar scanner requires upgrading, please contact your local Raymarine dealer for full information.

## Digital Sounder Module

**Important:**

Your Digital Sounder Module (DSM) should be C-Series compliant as indicated on the packaging.

If your DSM requires upgrading you will need to obtain a suitable accessory kit, Part No: E05014 from your local Raymarine dealer.

## Engines

For up-to-date information relating to compatible engines together with installation information, please refer to our website.

## Media storage cards

### Navionics Chart cards

To use your C-Series Display as a navigation aid, charts with detailed information for the area you wish to navigate are required. The charts are available on Navionics® Chart cards. A chart card provides an appropriate level of detail and scale for a given geographic area.

To obtain suitable Navionics Chart Cards, contact your local dealer or visit the Navionics web sites: **www.navionics.com** or **www.navionics.it**.

Alternatively, in North America call Navionics toll-free on **1-800-848-5896.**

Outside of North America, contact your local dealer or call Navionics SpA on tel: **(+39) 0584 961696** or fax: **(+39) 0584 961309**.

### CompactFlash cards

It is possible to archive or transfer information to and from your C-Series display and other compatible instruments using CompactFlash cards. To achieve the best results it is recommended that SAN DISK® CF memory cards are used.

## 2.4 Functionality

For full functionality some applications require a dedicated transducer to provide specific data. The table on below summarizes the data required by each application and the major functions of your C-Series Display.

### Data or equipment required for applications/functions

| | | Application/function | | | | | | | | |
|---|---|---|---|---|---|---|---|---|---|---|
| | | Radar | Chart | Fishfinder | CDI | Instrumentation | Engine monitor | Navtex | AIS | MARPA |
| Data/equipment | Chart card | | ✔ | | | | | | | |
| | GPS | | ✔ | ✔ | ✔ | ✔ | | | | |
| | Datum | | ✔ | | | | | | | |
| | Compass, autopilot or smart heading sensor | ✔ | ✔ | | | ✔ | | | | ✔ |
| | Radar scanner | ✔ | | | | | | | | ✔ |
| | Digital Sounder Module (DSM) | | | ✔ | | ✔ | | | | |
| | Instruments | | | | | ✔ | | | | |
| | Video camera/input | | | | | | | | | |
| | Weather receiver | | | | | | | | | |
| | Navtex receiver | | | | | | | ✔ | | |
| | Compatible engine data | | | | | | ✔ | | | |
| | AIS receiver | | | | | | | | ✔ | |

**Notes: (1)** *For full details of scanner compatibility see page 13. If you are still unsure as to your scanner's suitability, please refer to an authorized Raymarine dealer.*

**(2)** *Engine output from a compatible engine manufacturer is also required. See Raymarine.com for latest compatibility information.*

**(3)** *Whilst an AIS receiver is not required for the radar and chart applications to function, this receiver is necessary if AIS functionality is required within radar and chart.*

In particular, position, heading and speed data are required for the following functions:

- **Orientation** - requires heading data derived from a suitable compass, for the radar to operate in North Up or Course Up mode and the chart to operate in Course Up and Head Up modes.
- **Man Overboard (MOB)** - requires heading and speed data. Alternatively, use speed over ground (SOG) and course over ground (COG) derived from the same source as position data (GPS).
- **Mini Automatic Radar Plotting Aid (MARPA) and radar/chart overlay functions** - requires accurate heading data. MARPA functionality is provided if SOG and COG are also available. Increased accuracy will be obtained by using fast heading data from a suitable compass, Smart heading sensor or compatible Raymarine autopilot.

## 2.5 How is the C-Series display integrated?

The diagrams that follow show some suggested set ups. These are not however the only possible combinations.

### SeaTalk system

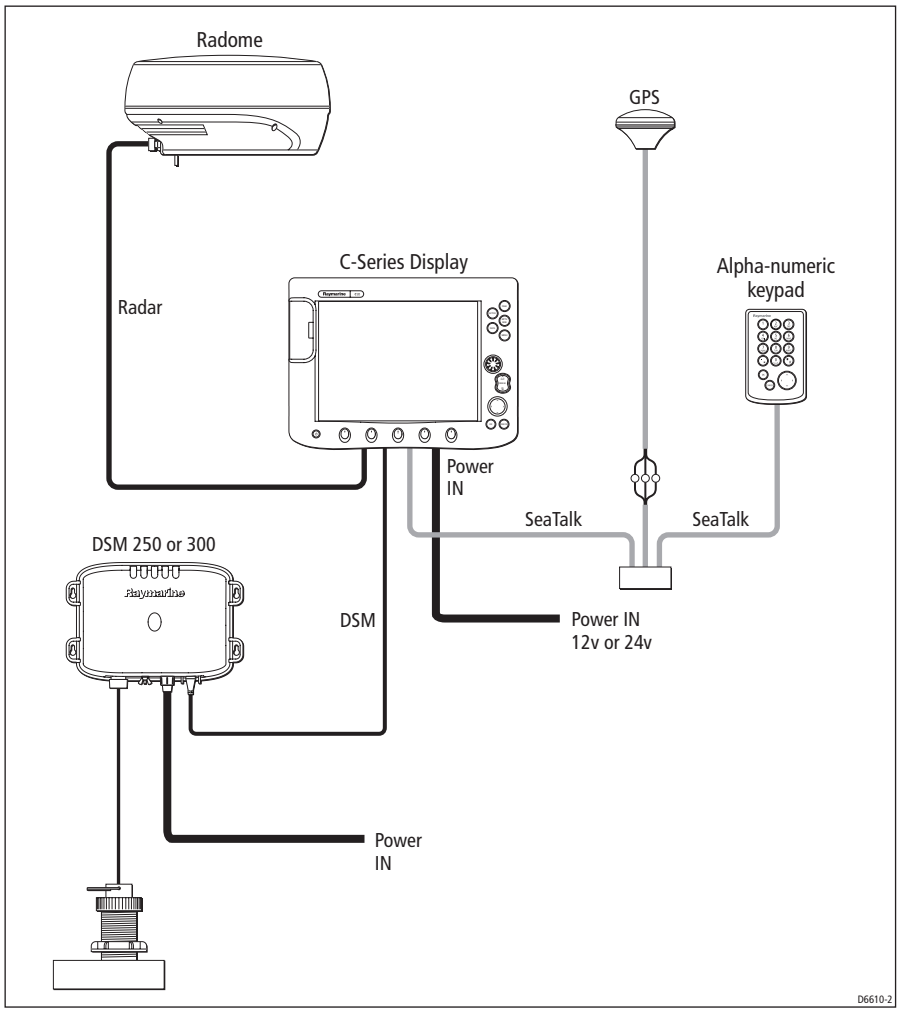


In this system:

- C-Series powers SeaTalk for an alpha numeric keypad and RS120.
- The DSM has a dedicated cable supplied with the unit and does not require a terminator at the C-Series end.

## Integrated system1

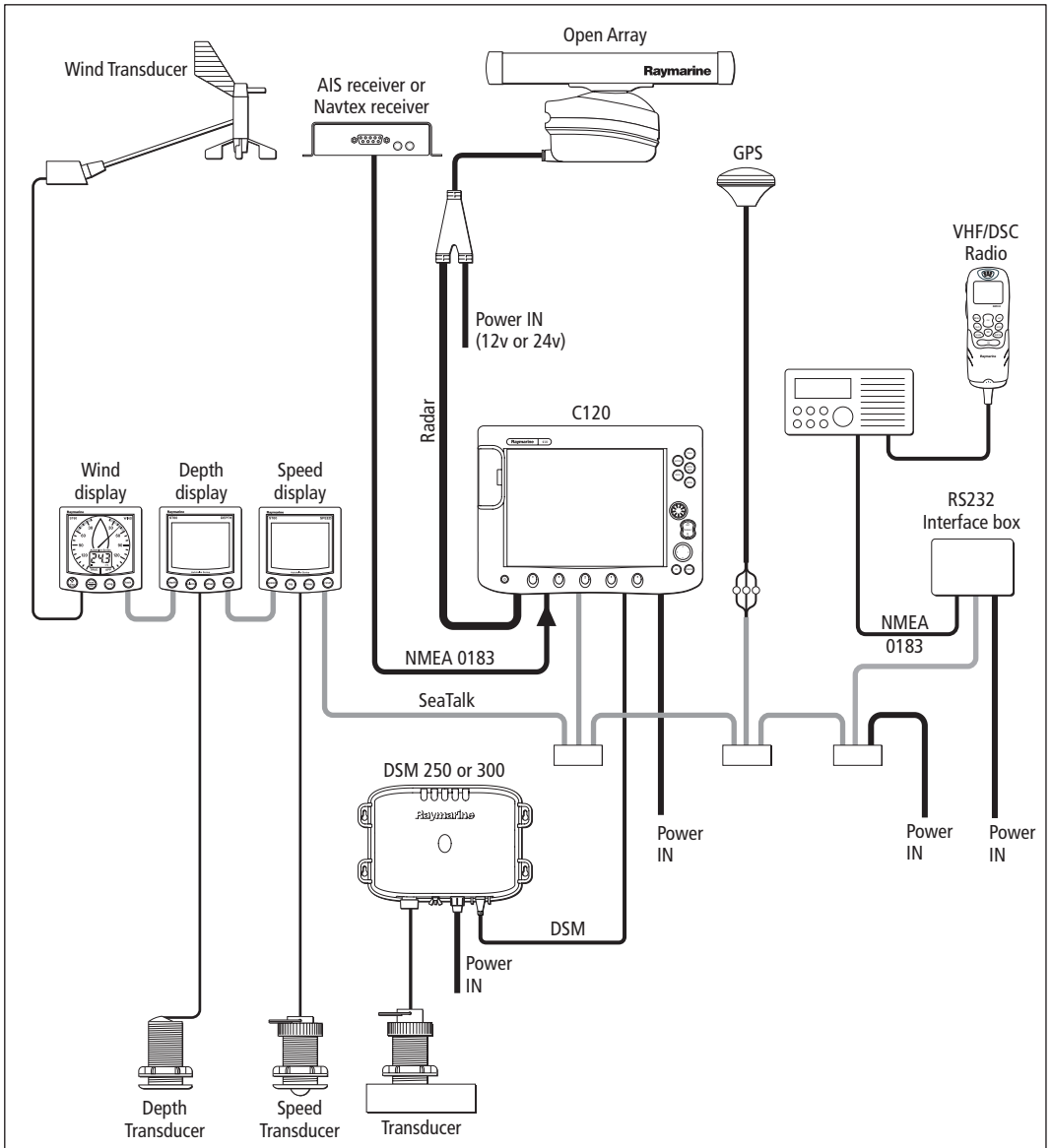


Note: If you select the depth data box it will show SeaTalk transducer depth.

In this system:

- SeaTalk is powered independently.
- SeaTalk bus must remain powered when C-Series is off so that the radio continues to receive GPS data.
- Open arrays must be powered using the split cable.
- AIS or Navtex receiver connected via NMEA 0183 cable

## Integrated system 2

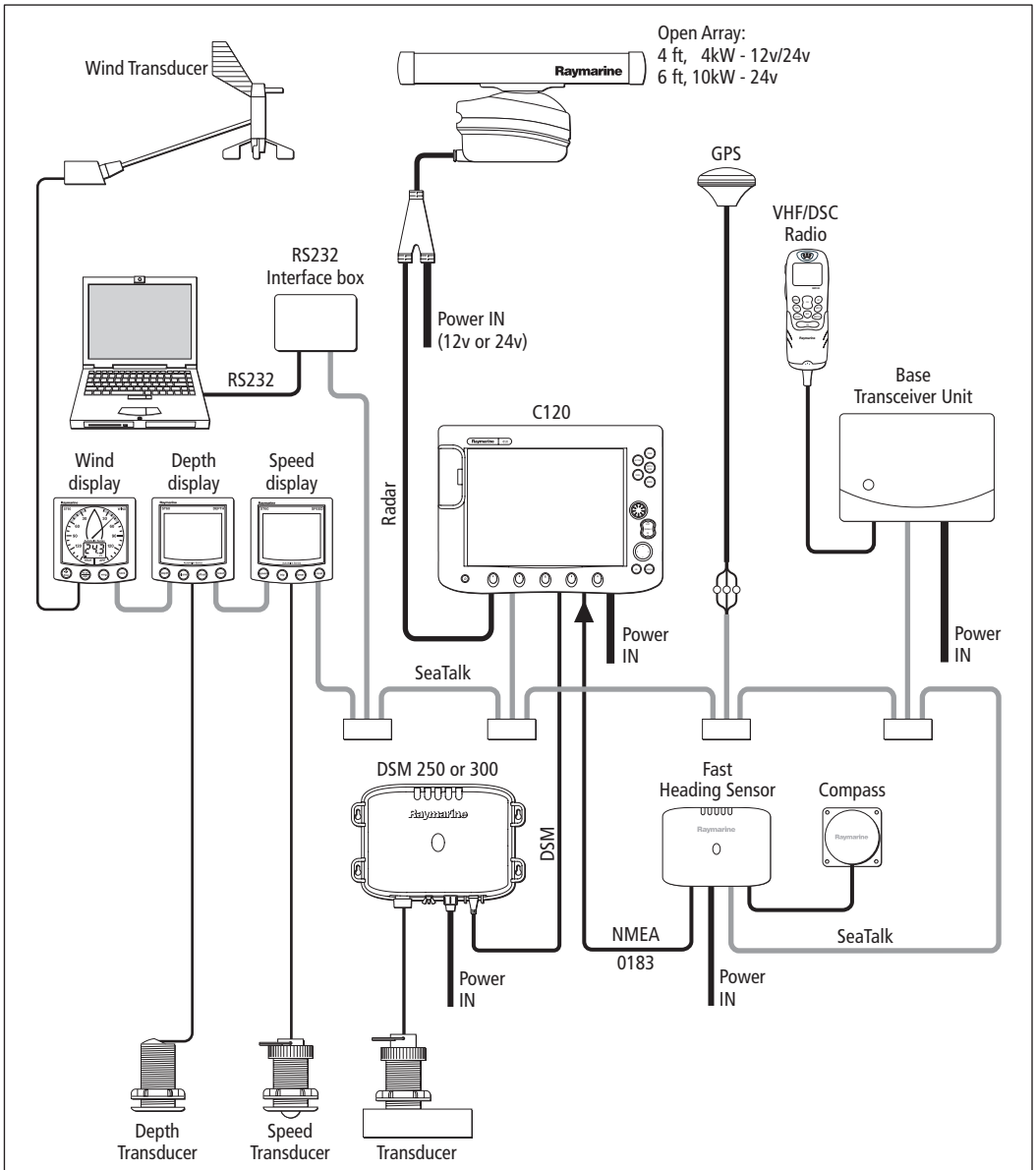


Note: If you select the depth data box it will show SeaTalk transducer depth.

D6623-3

In this system:

- PC displays instrument information including route and waypoint details.
- Smart heading sensor provides fast heading data for MARPA and radar overlay.
- Autopilot provides power for SeaTalk.

## Integrated system 3

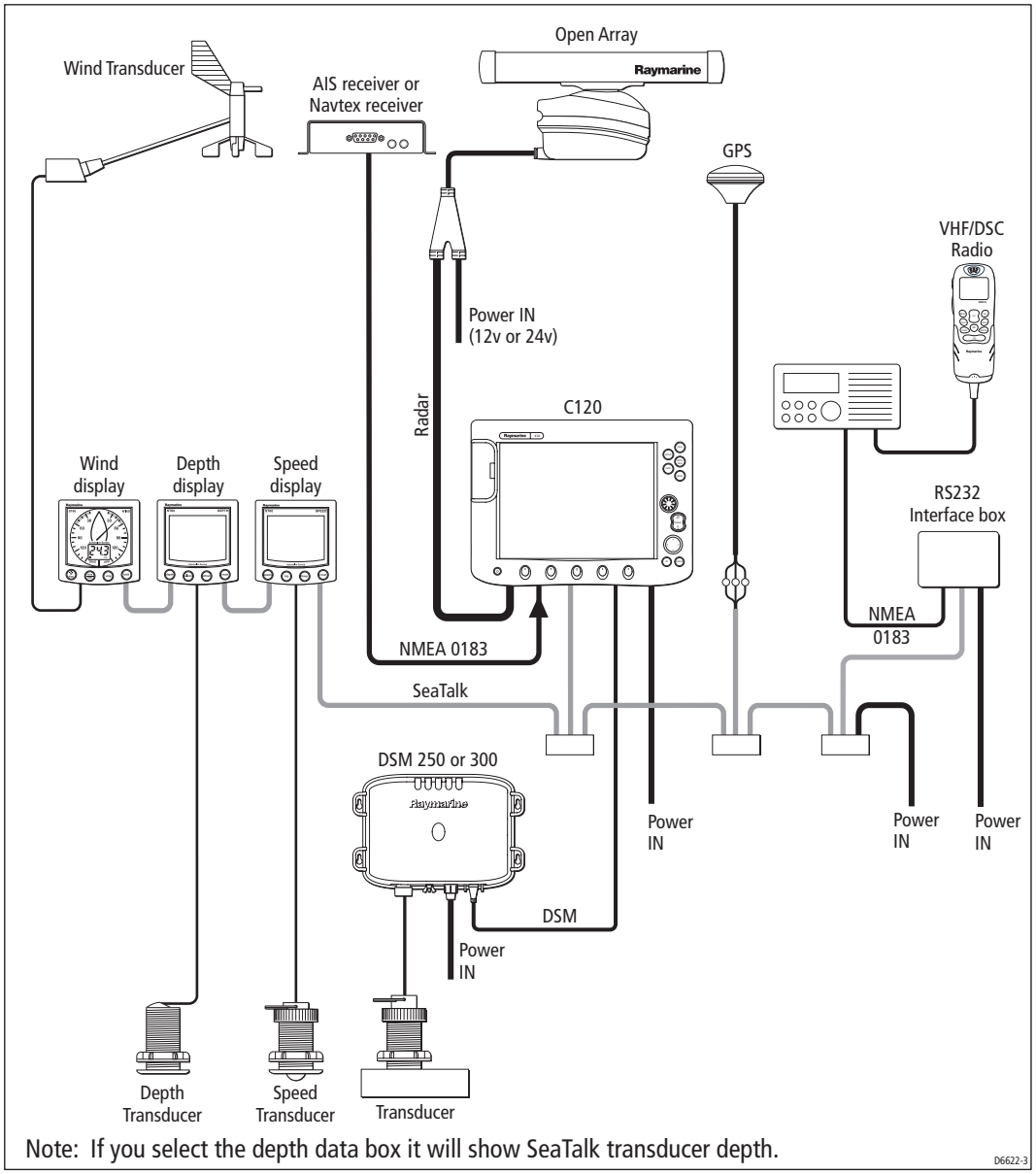


Note: If you select the depth data box it will show SeaTalk transducer depth.

In this system the course computer with rate gyro will provide fast heading for radar overlay and MARPA.

# Chapter 3: Installation

**CAUTION: Preparation**
**Please ensure that you have read 'Preparation for Installation before proceeding.**

**CAUTION: Radar Scanners, Cables & Installation**
**Information on radar scanners, cables and their installation contained in this handbook supersedes that contained in the Pathfinder Radar Scanner Handbook, Document No. 81154_8, dated 12th January 2005.**

## 3.1 Introduction

This chapter provides instructions for installing your C-Series Display. You may find that your system does not use all the protocols or contain all of the instrumentation that is described.

## 3.2 Mounting the display

**CAUTION: Mounting**
**Make sure there are no hidden electrical wires or other items behind the selected location before proceeding.**

**Make sure there is sufficient rear access for both mounting and cabling.**

The display is waterproof to CFR 46 and can be installed either above or below deck using either the trunnion bracket or by flush mounting it in a suitable position.

Whichever option is chosen for installation, it is recommended that the external rear trim is fitted. This has been designed to give additional strength to the unit.

### Trunnion mount

The display unit can be fitted on a dash, chart table, bulkhead or deckhead, using the trunnion bracket:

You should fit the mounting bracket as follows:

1. Mark the location of the mounting bracket screw holes on the chosen mounting surface.
2. Drill pilot holes for the screws using a suitable drill, taking care that there are no cables or anything that may be damaged behind the surface.
3. Use the screws supplied to attach the mounting bracket securely.
4. Fit the trim ring to the rear of the display using the M4 bolts supplied.
5. Attach the display unit to the mounting bracket.

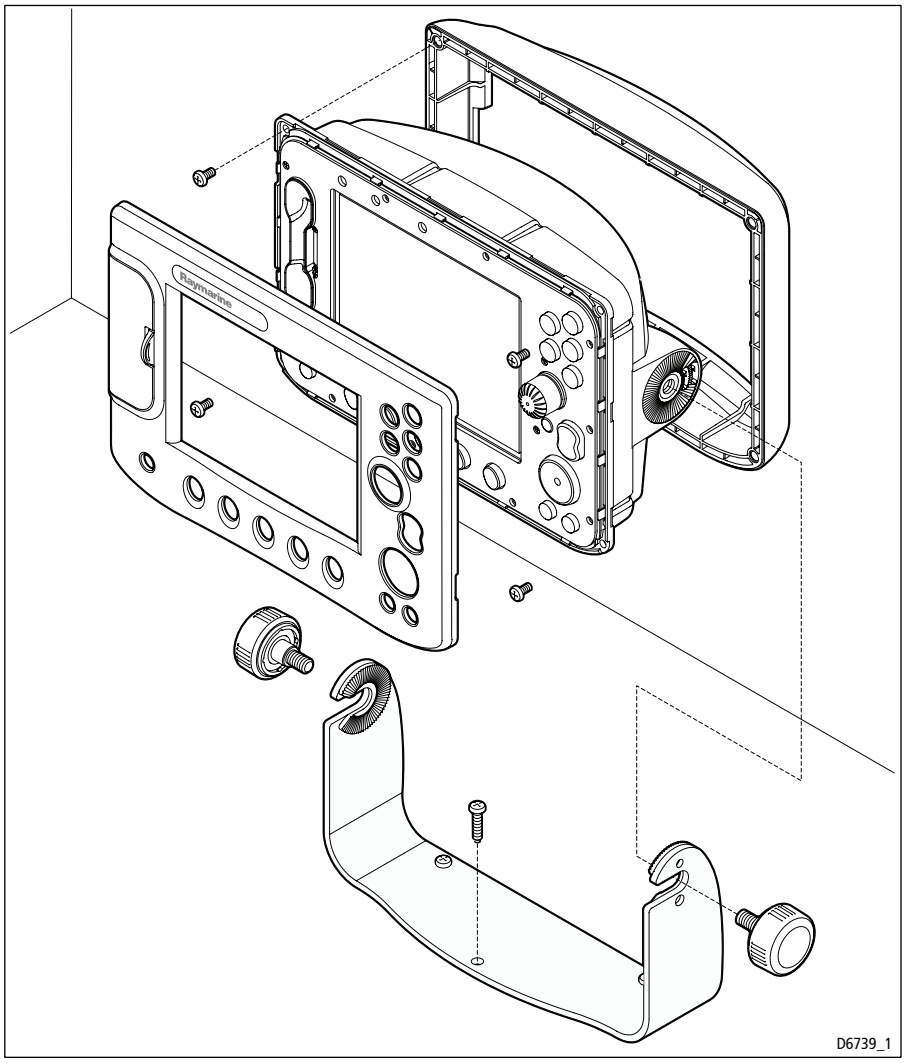


6. Locate the bezel over the front of the display. See "Attaching the front bezel" on page 24.
7. Check that the buttons have passed through the bezel and are free to operate. It is suggested that you use your thumb or forefinger in a circular motion to do this.
8. Adjust the unit to the required angle for clear vision, and tighten the trunnion knobs.

## Flush mount

Your display can be flush mounted on the console as follows:

1. Check the selected location for the unit. A clear, flat area with suitable clearance behind the panel, is required.
2. Fix the appropriate template - C70, C80 or C120, supplied in the document wallet, to the selected location, using masking or self-adhesive tape.

3. Using a suitable hole saw (the size is indicated on the template), make a pilot hole in each corner of the cut-out area.

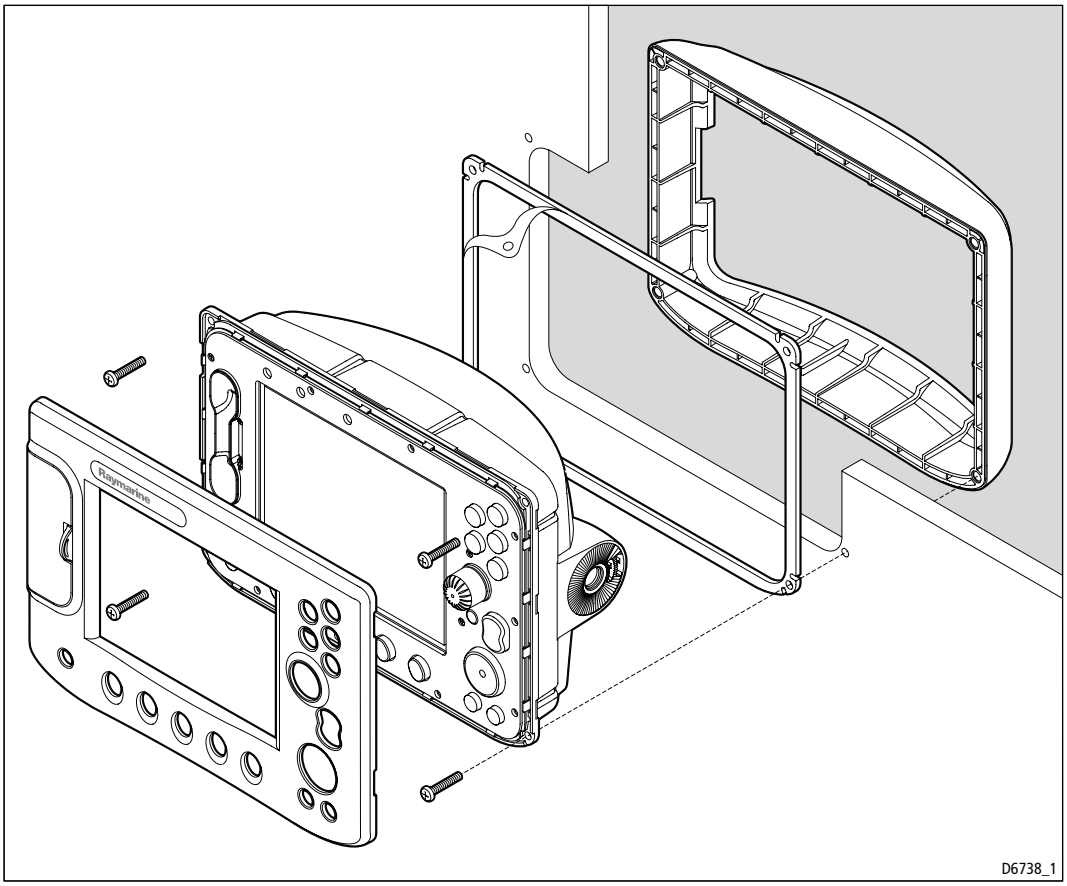


4. Using a suitable saw, cut along the inside edge of the cut-out line.
5. Ensure that the unit fits into the removed area and then file around the cut edge until smooth.
6. Remove the mounting bracket knobs and the mounting bracket from the display unit.
7. Drill four 4.5 mm holes as indicated on the template to accept the securing bolts.
8. Place trim ring into the cut-out, ready for securing the unit.
9. Place the gasket onto the display unit and press firmly onto the flange.
10. Connect the DC power cable, scanner cable, SeaTalk and Fishfinder connector cables to the display, avoiding tight bends.
11. Slide the unit into the console and secure using the trim ring and suitable length bolts (see table below)
12. Locate the bezel over the front of the display (see *page 24*).

### Fixing bolts

When console mounting your C-Series Display, avoid damaging the rear trim ring by using the correct length bolts. The length used is dependant upon bulkhead thickness:

| Bulkhead Thickness (mm) | Bolt length (mm) |
|---|---|
| 0-3 | 12 |
| 3-7 | 16 |
| 7-11 | 20 |
| 11-15 | 24 |
| 15-19 | 28 |
| 19-23 | 32 |

## Attaching the front bezel

After you have installed the C-Series Display in the required position, you should attach the front bezel as follows:

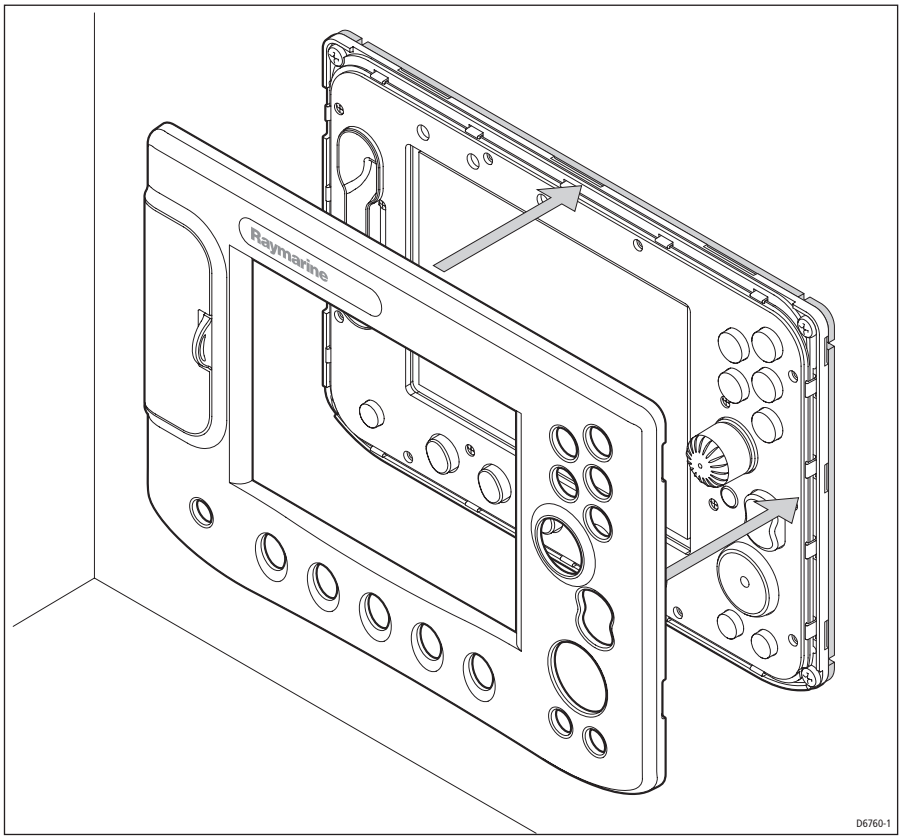


1. Carefully lift one edge of the screen protection film, so that it is accessible for removing when unit installation is complete.

2. Place the bezel over the front of the C-Series Display, ensuring that locking lugs located at the bottom edge of the bezel are latched into position.
3. Ensure that the control buttons pass through their respective openings.
4. Apply firm but even pressure to the bezel along the:
   - Outer edges - work from the sides upwards and then along the top edge, to ensure that it clips securely into position.
   - Inner edges - particularly along the chart card door edge, to ensure that the bezel sits flat.
5. Check that all control buttons are free to operate. It is suggested that you use your thumb or forefinger in a circular motion to do this.

## Removing the front bezel

To remove the front bezel:

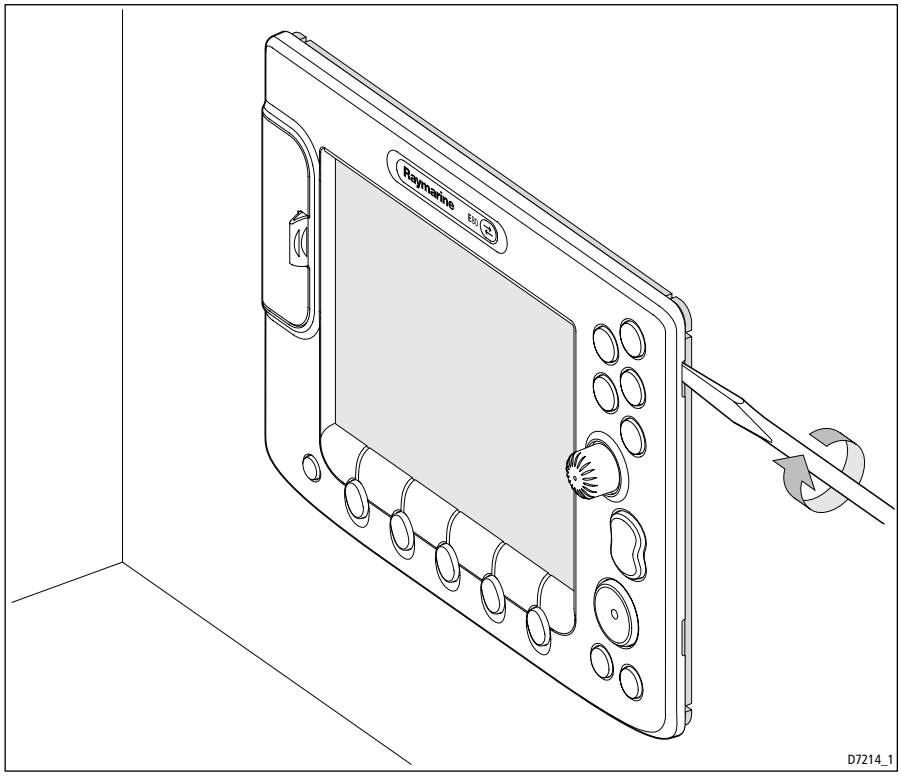


1. To prevent damaging your dash or placing undue strain on the trunnion bracket:
   - Trunnion mounted unit - unscrew and remove display from the mounting.
   - Flush mounted - protect your dash and proceed with caution.
2. Place a flat-bladed screwdriver in the aperture at the top right of the bezel and gently twist it to release the top clips.

3. Working from this corner, free the clips along the top edge of the display, then work towards the bottom edge. Taking care to ensure that the control buttons pass through the bezel. DO NOT lever along the top edge.
4. Carefully free the locating clips at the bottom of the bezel by lowering it away from the unit - DO NOT USE A SCREWDRIVER FOR THIS AS IT WILL DAMAGE THE CLIPS.
5. Remove the bezel from the display.

## 3.3 Cables

This section details how to instal and connect all the relevant cables to your C-Series Display:

### Siting and securing cables

Please note the following:

- All cables should be adequately secured, protected from physical damage and exposure to heat. Avoid running cables through bilges or doorways, or close to moving or hot objects.
- Connectors should be protected from damage. If it proves necessary to pull cables through a bulkhead or deckhead using a cord, this should be attached several inches behind the connector. **Do not attach a tie immediately behind or around the connector**.
- Acute bends must be avoided.
- Where a cable passes through an exposed bulkhead or deckhead, a watertight feed-through should be used.
- Secure cables in place using tie-wraps or lacing twine. Coil any extra cable and tie it out of the way.

### Connecting cables

You will need to install and connect the following cables to ensure that your display functions correctly:

- SeaTalk cable (if SeaTalk system connected).
- NMEA cable (if third party equipment, NMEA multiplexer, fast heading sensor, RS232 interface or course computer fitted).
- SeaTalk$^2$ cable (if Sea Talk$^2$ system connected).
- Radar cable (not supplied).
- Power cable.

The cable connections are located on the back of the unit. If a trunnion bracket is being used, all cables can be connected prior to mounting the unit. Please read the details relating to each cable before connecting them.

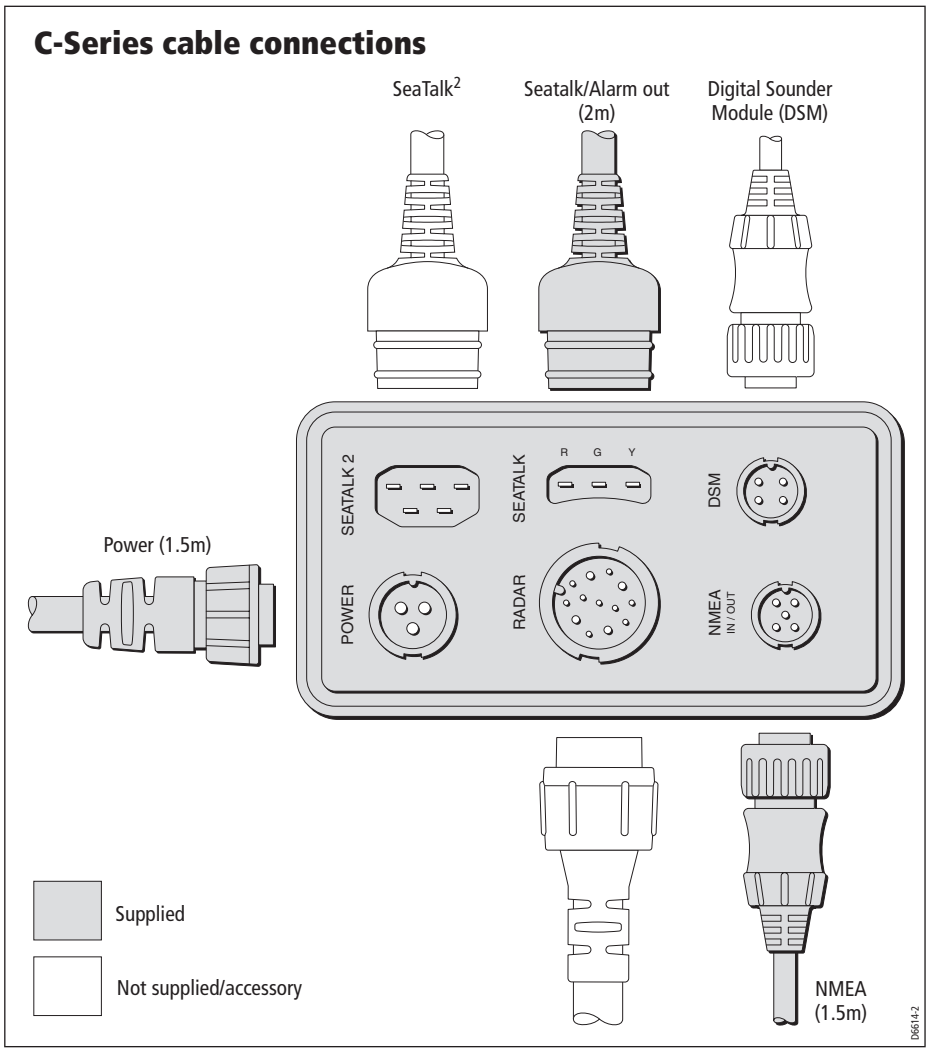


## Using cable splicers

The cable splicers are used to make the connections from the SeaTalk/Alarm out and NMEA 0183 cables easy and secure, without removing insulation from cable tails.

**Note:** *Do not use cable splicers on any cables other than SeaTalk/Alarm out and NMEA 0183.*

To use these connectors:

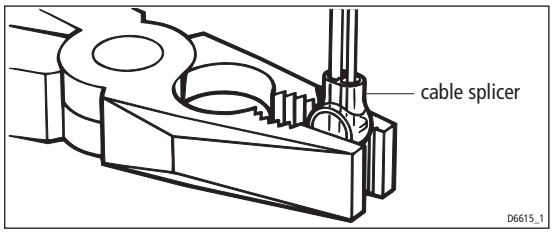

1. Place the wires to be joined into the connectors, ensuring correct polarity and that the wires are pushed fully home.
2. Using a pair of pliers, crimp the connector bulb together.
3. Check that a secure connection has been made.
4. Ensure that the cables are secured in a suitable position to prevent the join being placed under strain.

## Power cable (R08003)

**The C-Series Display is intended for use on boats' DC power systems rated at 12v or 24v.**

**The power connection should be made at either the output of the battery isolating switch, or at a DC power distribution panel. Raymarine recommends that power is fed directly to the display and scanner via its own dedicated cable system and MUST be protected by a thermal circuit breaker or fuse, installed close to the power connection.**

This cable is supplied prepared for connecting to your boats DC power supply, with the cable is supplied with a length of screen exposed before the positive and negative wire tails.This screen should be clamped to your boat's earth/ground with the saddle clamp, as shown below:

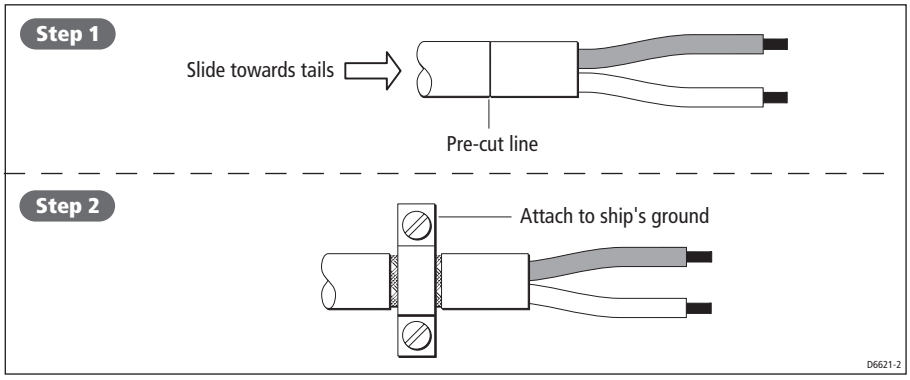


### Extension cable

If an extension power cable is required, please note the following:

- The wire gauge used may be affected by the scanner type.
- To minimize voltage drops, use large gauge cable.
- Use the supplied power cable to connect to the display unit. Then use a suitable connector block to connect the free end to the extension cable, taking particular care to ensure the correct polarity. The supplied power cable has a cross section of 10 mm.

### Fuse, circuit breaker and switch ratings

| Radar scanner? | Device | Rating |
|---|---|---|
| No | with fuse | 6.3 amp anti-surge fuse |
| | with isolator switch | 10amp |
| | with thermal circuit breaker | 5 amp |
| Yes | Refer to the fuse notification in the scanner handbook. | |

## SeaTalk cable

The SeaTalk cable is supplied with stripped tails. These should be connected to your existing equipment using either the cable splicers supplied or by using a standard screw terminal block.

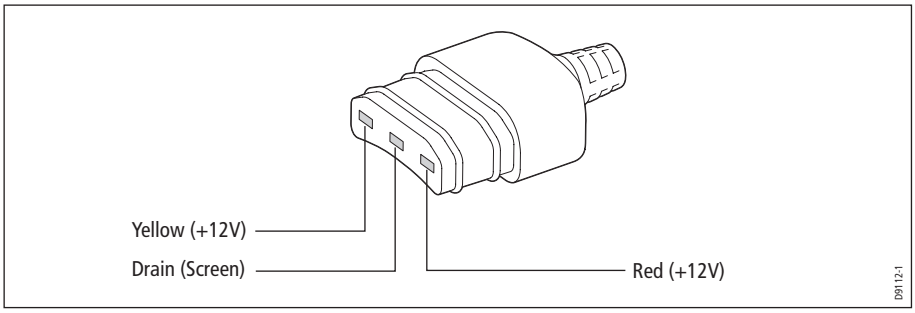


## NMEA 0183 cable

The NMEA input cable is supplied with exposed wire connecting tails.These should be connected to your existing NMEA instruments using suitable connector blocks as follows:

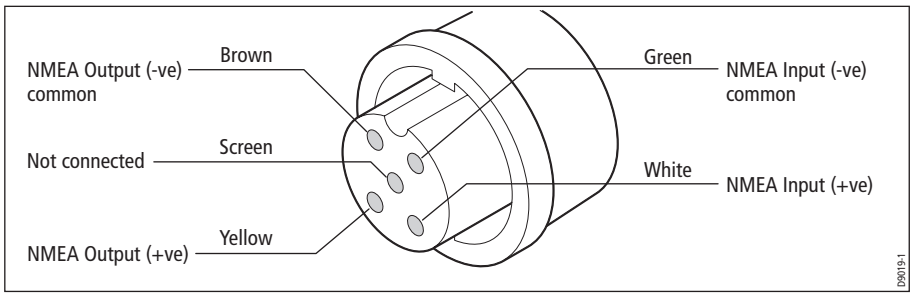


## SeaTalk$^2$ (not supplied)

Use this cable to connect to third party equipment or SeaTalk$^2$ instruments.

## Fishfinder cable

The fishfinder cable is supplied with your Digital Sounder Module (DSM). This cable should be run and connected to the rear of the display.

### DSM 250

A terminator must be fitted to the cable at the DSM 250:

- 10m cable - E05016
- 3m cable - E65009

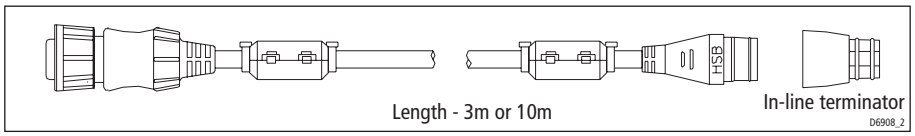


### DSM 300

No terminator is required for connection to a DSM 300:

- 3m cable - E65010 (supplied with the DSM 300)
- 10m cable - E65011 (accessory)

## Radar cable (not supplied)

Having ensured that the radar scanner you are using is compatible with the C-Series Display (see page *page 13*), the cable should be connected as follows:

### Connecting a radome

If you are using a radome this can be powered through the display.Run your cable and connect it to the radome and the display.

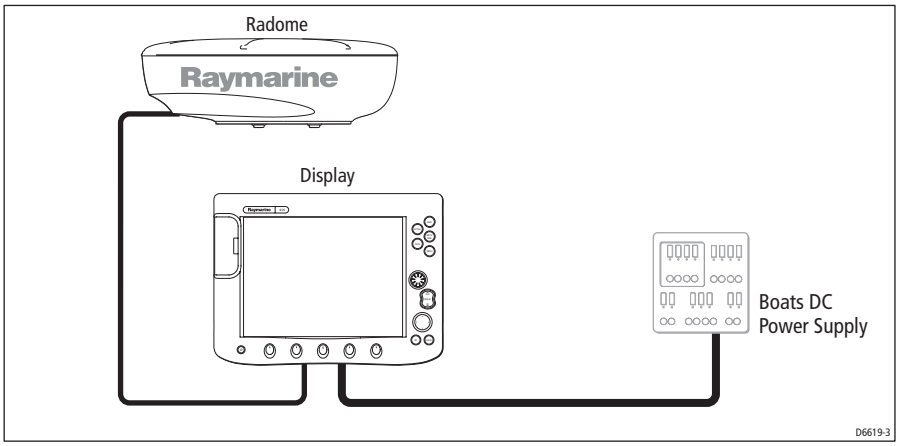


**Note:** *In this configuration significant current passes through the power cable. Any extension should be as short as possible using a large wire gauge.*

If the existing cable is too short, please order from the following:

| Part No. | Cable length | Weight | Radome power output |
|---|---|---|---|
| E55065 | 15m | Heavy | 2Kw or 4 Kw |
| E55066 | 25m | Heavy | 2Kw or 4 Kw |
| E55067 | 10m | Light | 2kw |
| E55068 | 15m | Light | 2kw |

**Radome inter-unit cable for use with the C Series display**

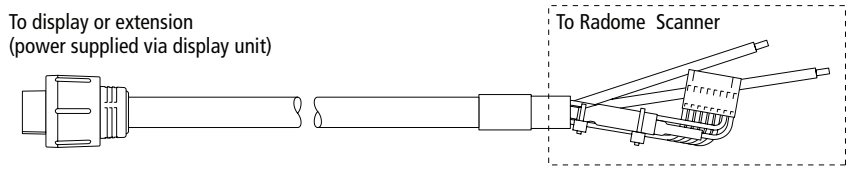


## Connecting to an open array

If you are using an open array, this cannot be powered through the display. You will need to purchase a split pedestal cable or open array package and connect the array and display as shown:

### ...for new installations

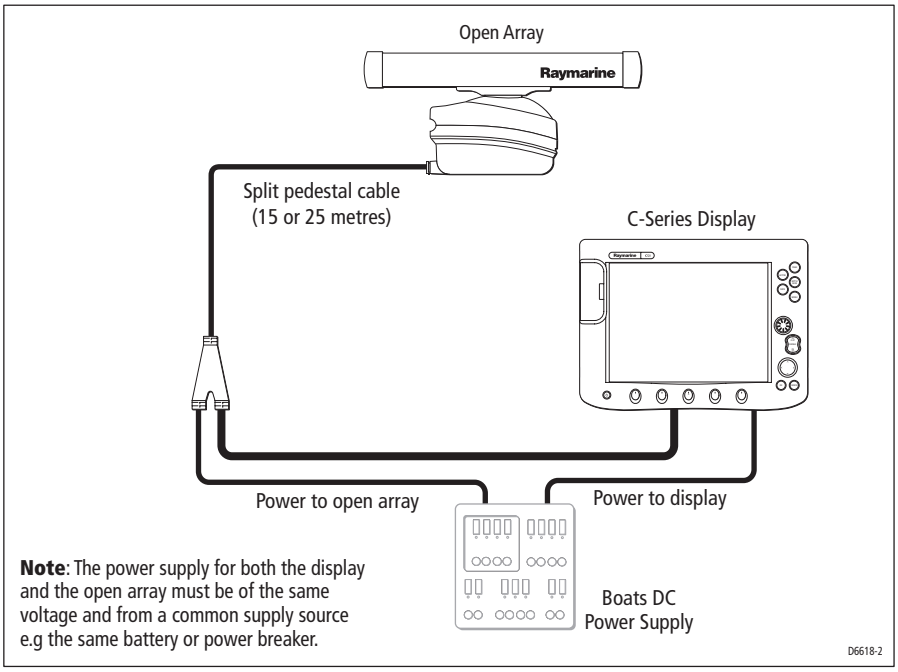


**Note**: The power supply for both the display and the open array must be of the same voltage and from a common supply source e.g the same battery or power breaker.

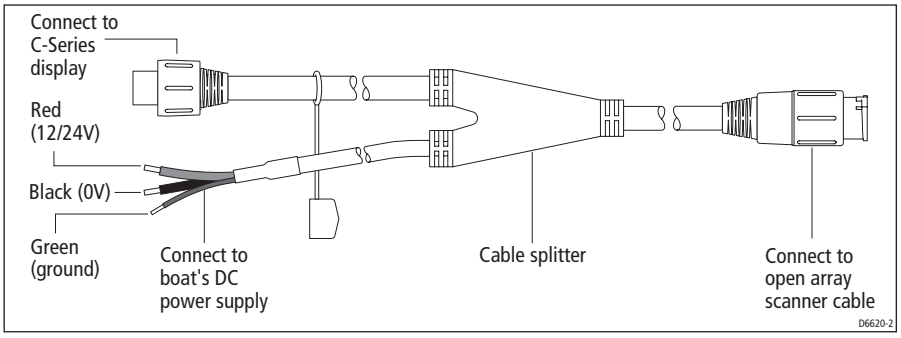


The split pedestal cables are available from your local Raymarine dealer as follows:

| Part No | Description |
|---|---|
| E05017 | 25m Split pedestal cable |
| E05018 | 15m Split pedestal cable |
| E05019 | Pedestal adaptor cable |

### ... to replace a Raymarine Pathfinder Display

| Part No | Description |
|---|---|
| E55063 | 15m Split pedestal cable |
| E55064 | 25m Split pedestal cable |

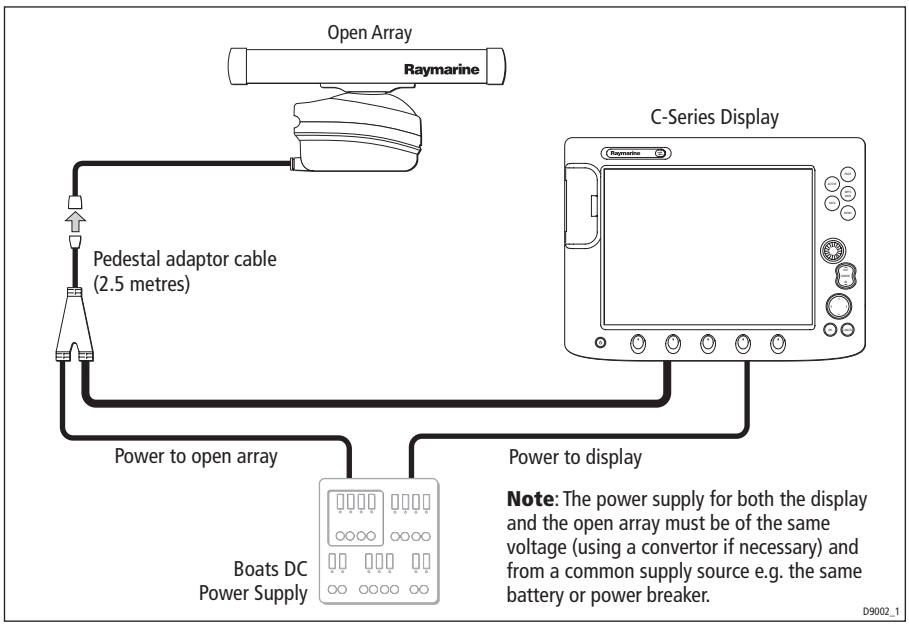

**Split pedestal cable**

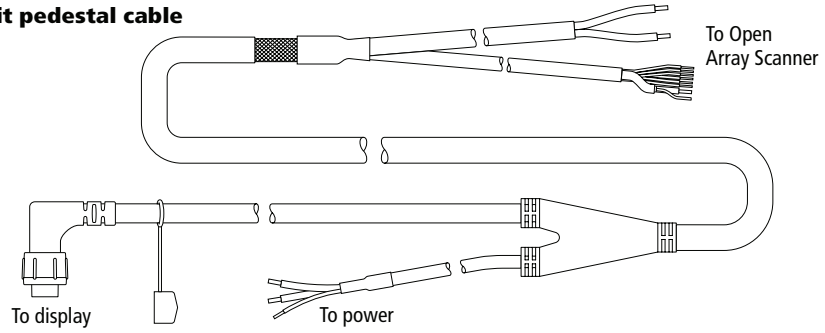


**Note:** You should ensure that the distance (cable route) from the power supply to the open array is kept to a minimum.

D7209-1

# Chapter 4: Commissioning the system

## 4.1 Introduction

This chapter details the commissioning of your C-Series Display and includes the following:

- Required input.
- Pre-start checks.
- Initial power on procedure
- Radar checks and alignment.
- Chart application checks.
- Fishfinder checks.
- AIS.
- Navtex.

## 4.2 Pre-start checks

Before you perform any functional tests, please carry out the following pre-start checks:

**Radar**

- Check that the scanner has been installed in accordance with the instructions contained in the relevant handbook. All securing bolts should be fully tightened and any mechanical locking arrangements, as specified, are in place.
- Ensure scanner and power connections have been made.
- If an open array is fitted, ensure that power is connected through a split cable to a suitable circuit breaker and that the power switch located on the pedestal is set to **ON**.
- All connecting wires are secured and protected as necessary.

**Note:** *If you are the boat's owner and have installed the radar system, ask an authorized Raymarine dealer to check the installation before going to sea.*

**WARNING:Electromagnetic energy**
**The radar scanner transmits electromagnetic energy. Ensure that the scanner has been installed according to the recommendations in the relevant scanner handbook. Ensure all personnel are clear of the scanner, before switching to transmit mode.**

**Fishfinder**
Ensure that the transducer cable is securely connected into the DSM 250 or 300.

**GPS**
Check that the GPS has a clear view of the sky and is not obstructed e.g. by buildings, bridges or other equipment fitted on-board.

**Other equipment**
For details of pre-start checks for other equipment e.g. AIS and Navtex receivers, please refer to the relevant handbook.

## 4.3 Initial power on procedure

Once you have conducted the pre-start checks you are ready to start the display:

1. Press the **POWER** button until the introductory logo is displayed:
   - The keys light up and after a few seconds a navigation warning is displayed.
   - At this time the radar scanner (if fitted and powered) is checked for compatibility with the display. An error message is displayed if the scanner is incompatible.
2. Read the warning and then press **OK** to remove it. The Select Page Set screen is displayed:

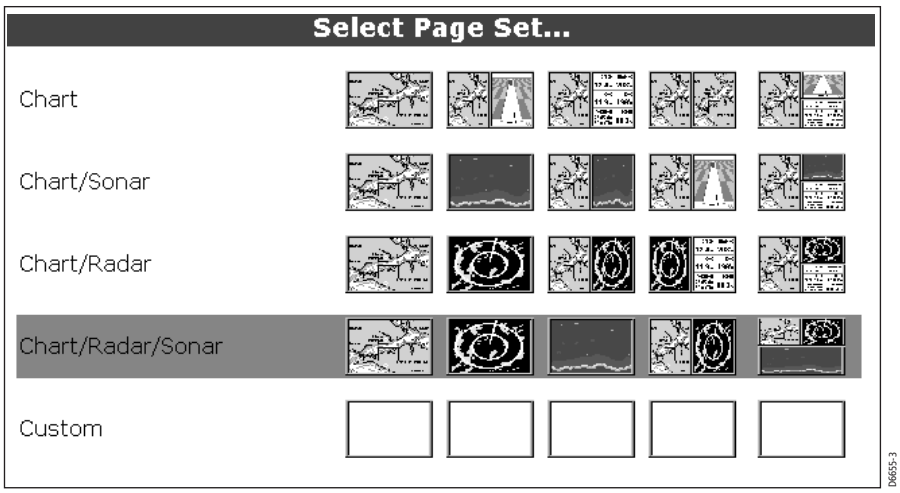


3. Use the trackpad to select the required page set and then press **OK**.

You are now ready to test that your system is receiving the necessary data to run all the required applications.

# 4.4 Tests and checks

## Test and align the radar

Your C-Series display is part of an integrated system. Raymarine strongly advise that you test and align the radar **before** connecting to other systems.

To test and align the radar you must first select a radar application. With the Select Page Set screen displayed (see previous section):

1. Press **OK** to select the highlighted page set.
2. Press **PAGE**. The currently selected page set is represented on the soft keys.
3. Press the corresponding soft key to display a full window radar application.
4. The scanner warm-up countdown commences. This takes 70 seconds (approx).

   **Note:** *If your scanner is incompatible, a message is displayed. If this is the case, you will be unable to proceed further with testing and aligning the radar. Refer to Important Information - Radar Scanners at the front of this handbook.*

## Radar transmission check

With a radar application active, check the transmission to the scanner as follows:

1. Press the **RANGE** button and ensure that the radar range adjusts accordingly.
2. Check that all the following information is displayed:
   - In the status bar - the range, orientation, motion mode and range ring spacing
   - In the data bar - a turning radar status icon and vessel position data.

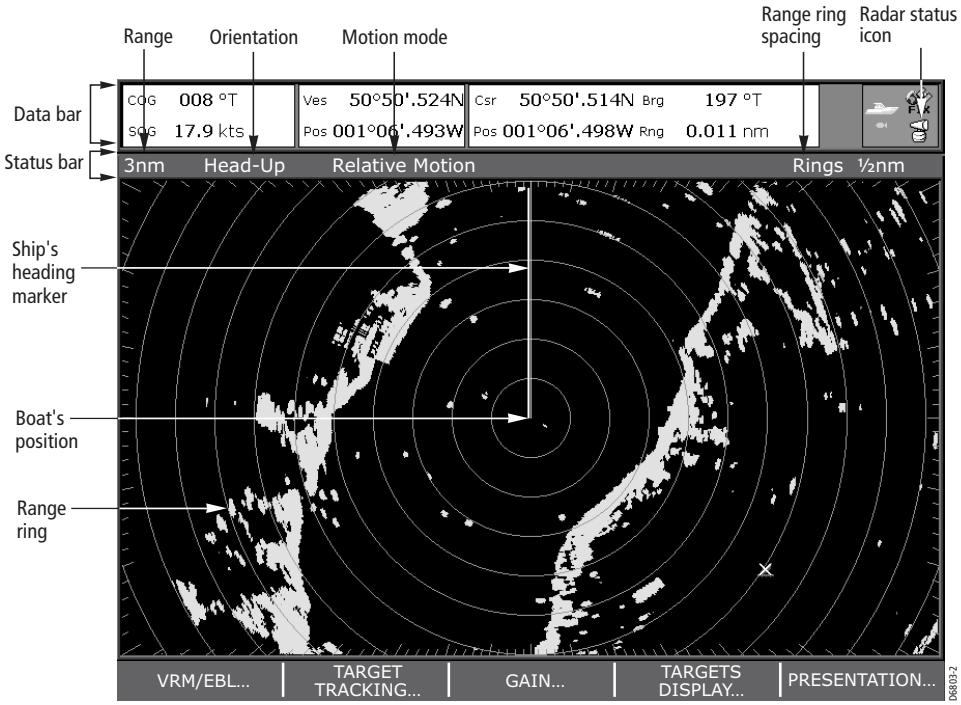

## Radar alignment checks

You should check the bearing and display timing alignment to ensure that an accurate picture is shown.

### Bearing alignment

Adjusting the bearing alignment ensures that targets appear at the correct bearing relative to your boat's bow. You need to select a visible target of known bearing that is displayed on the radar, and then adjust the radar set up as necessary until the correct bearing reading is obtained.

You can carry out a bearing alignment in two ways:

#### ... with your boat moored

To use this method you will need a hand bearing compass:

1. Visually identify a suitable target, such as a buoy that can be seen towards the edge of the radar screen. Typically, this will be on the 1.5nm range.
2. Determine the accurate bearing of the target relative to your boat's bow using the hand bearing compass. To do this subtract your boat head bearing from the target visual bearing, these examples may help:

| **Example 1** | **Example 2** |
|---|---|
| Visual bearing (a) = 065° M | Visual bearing (a) = 030° M |
| Ships head bearing (b) = 021° M | Ships head bearing (b) = 042° M |
| Relative bearing:<br>= (a) - (b)<br>= 065 - 021 = 044° R | Relative bearing:<br>= (a) - (b)<br>= 030 - 042 = -012<br>If answer is negative, add 360° =<br>-012 + 360 = 348° R |

3. From the primary radar soft keys, press VRM/EBL.
4. Toggle the VRM/EBL soft key to ON. Adjust the EBL to your chosen target. If there is a difference between your calculated bearing and that shown for the EBL, there is an alignment error and you will need to carry out bearing alignment adjustment, *See "Adjusting the bearing alignment" on page 39.*

#### ... with your boat under way

1. Align your boat's bow with the selected target.
2. Note the position of the target relative to the Ships Heading Marker (SHM) on the radar picture. If the target is not under the SHM, there is an alignment error and you will need to carry out bearing alignment adjustment. For details see below.

### Adjusting the bearing alignment

1. If moored, move the EBL to calculate bearing.
2. With a radar application in the active, press MENU. The Set Up menu is displayed.
3. With RADAR SET UP highlighted, use the trackpad (right) to display the RADAR SET UP menu.
4. Use the trackpad (up/down) to highlight and then the trackpad (right) to select BEARING ALIGNMENT. The menu is removed from the screen and the Bearing Alignment soft key is displayed.
5. Press the BEARING ALIGNMENT softkey.
6. Proceed as follows:
   - **If the boat is moored** - use the rotary control to place the selected target under the EBL.
   - **If the boat is under way** - use the rotary control to place the selected target under the SHM.
7. Press **OK**. The picture updates as the bearing alignment is adjusted.
8. To exit the menu, press **OK** or **CANCEL**.

## Checking the GPS

The GPS is used to position your boat on the chart. You can set up your Global Positioning System (GPS) and check its status using the GPS status icons and the GPS Status page of the Setup menu.

To access the GPS Status page:

1. Press **MENU**. The Setup menu is displayed.
2. Highlight and then select GPS Status. The GPS Status dialog box is displayed e.g.

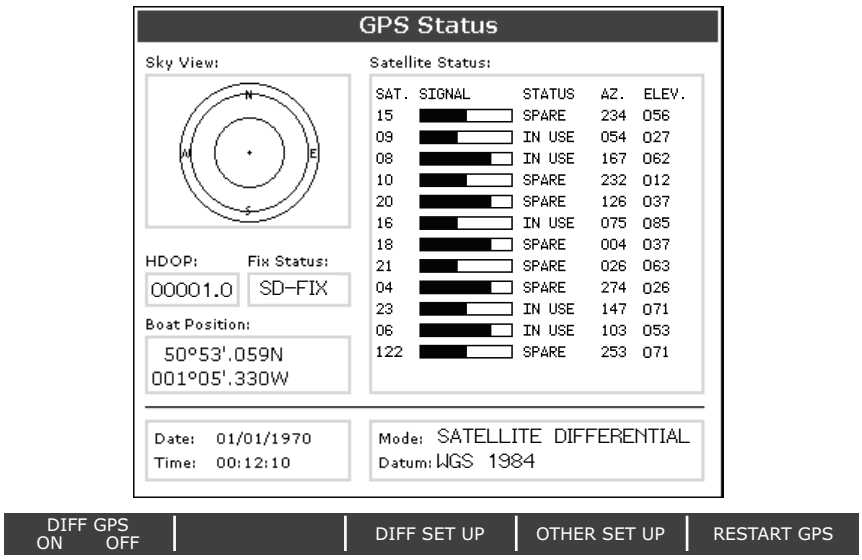

This screen provides, for each tracked satellite, the satellite number, a graphical signal strength bar, status, azimuth angle and its elevation angle from your vessel. The sky view graphic shows the position of these satellites.

Positional accuracy is dependent upon these parameters; in particular, the azimuth and elevation angles are used in a triangulation process to calculate your position. Horizontal Dilution of Position (HDOP) is a measure of this accuracy; a higher figure signifies a greater positional error. In ideal circumstances, the figure should be in the region of 1.0.


When a connection has been successfully made, the GPS status icon in the top right-hand corner of the screen reads FIX.


D7453_1

If NO FIX is displayed, please refer to the Troubleshooting section on *page 45*.

The option to select differential or satellite differential fix is dependent upon the capabilities of the attached GPS. If your boat is equipped with a Raymarine GPS, the Differential GPS can be switched on or off using the appropriate soft key.

## Checking heading data

If your display is connected to a compass, autopilot or fast heading sensor, your boat's heading will be displayed in the data bar. If heading data is not available your display can use COG data. This will however affect the operation of the following functions:

- overlay a radar image over your chart.
- orientate a radar image north-up.
- MARPA.

To linearize ('swing') your compass proceed as follows:

1. Press **MENU**.
2. Select the Compass Setup sub-menu.
3. Press LINEARIZE COMPASS and follow the instructions displayed on screen. When instructed to align heading, press the ALIGN HEADING soft key and then turn the rotary control **one click at a time** to fine tune the heading.

## Checking the Chart application

For full functionality of chart applications, you need to ensure that position data is available at the display via SeaTalk, NMEA, SeaTalk$^2$. To use your chart as a navigation aid you will need a CompactFlash card (see *page 13*) with the appropriate level of detail for the geographic area that you wish to navigate.

Proceed as follows:

1. Without a chart card installed, press **PAGE**.
2. Select a full window chart application by pressing the associated key.

3. Zoom out with the **RANGE** button until the world map is visible.
4. To ensure that the display is responding to position data:
   i. Press FIND SHIP.
   ii. Check that the cursor is positioned over the boat symbol in the centre of the display.
5. Insert a chart card containing a suitable chart for the area in which you are located. Once inserted, the chart should redraw with the cartridge chart boundaries displayed.

   **Note:** *For details of how to insert a chart card, please refer to Section 2.7, Using Compact-Flash cards in the Reference Manual.*
6. Zoom in with the **RANGE** button to check that chart data is being displayed.

## Testing the Fishfinder application

For the fishfinder application to function it must be connected to a DSM 250 or 300. The status of your DSM is indicated by the boat/fish icon in the data bar (top right-hand corner of the screen):

| DSM status icon | DSM status description |
|---|---|
| 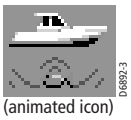 D6892-3 (animated icon) | Successful connection to a DSM and transmitting. |
|  D7451-1 (static icon) | DSM connected but not transmitting. |
|  D7452-1 (greyed-out icon) | No DSM connected/recognized. |

1. Press **PAGE** and select a full window fishfinder application.
2. Using the soft keys, check that individual settings change as they are selected.

## Setting the NMEA for AIS or Navtex

If you have a Navtex or AIS receiver attached to the NMEA port, you will need to change the NMEA Port Setting. This feature is accessed via the System Setup Menu / System Integration Setup Menu.

### Connecting equipment to the NMEA port

| Connected equipment to NMEA port | Setting | Additional information |
|---|---|---|
| General NMEA instruments | NMEA 4800 | Default setting |
| Navtex receiver | Navtex 4800<br>Navtex 9600 | Please refer to your Navtex receiver manual for details of the appropriate setting. |
| AIS receiver | AIS 38400 | |

## Testing instrument data

To ensure that your system is receiving instrument data, you should check the following:

### From SeaTalk or SeaTalk$^2$

Open the digital instrument application and ensure all relevant data is displayed. If you are not receiving data, check cable connections.

### From third party devices on NMEA 0183

Check that appropriate NMEA sentences are being sent from the third party device and on the C-Series Display. Open the digital instrument application and ensure all relevant data is displayed.

## Running AIS

In order to run AIS, you will need:

- A receive only AIS unit or a full transponder.

  A receiver will allow you to receive data about other vessels in your area but will not allow other vessels to 'see' you. A full transponder transmits and receives AIS data and therefore allows you to receive data about other vessels and for other AIS equipped vessels to see and receive information about your vessel. This could include position, course, speed and rate of turn data.
- A VHF antenna (part of an AIS system).
- A GPS.
- A Compass - although not essential, this will enhance performance.

When the AIS unit is connected to the C-Series display, the status of the unit is indicated by an AIS icon in the transducer data box.

You will now need to specify the 38,400 baud rate for the NMEA port that communicates with the AIS transceivers and receivers (see the table at the top of this page).

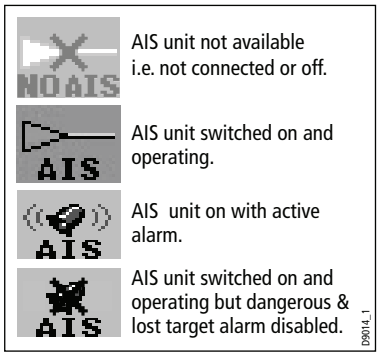


## 4.5 Advanced Settings

The Advanced Set Up features allow you to set the values for the following parameters that affect the fine tuning of your radar:

| Parameters | Function |
|---|---|
| Display timing | Corrects for display range error |
| STC preset | Equalizes target levels across display |
| Tune preset | Allows adjustment of the tuning range controlled by the TUNE control |

**Note:** *Under normal circumstances you will not need to adjust these settings, as they are set automatically at the factory. If these parameters are set incorrectly the performance of the radar will be adversely affected.*

### Adjusting the settings

You can adjust the advanced settings as follows:

1. Press **MENU**. The Set Up menu is displayed.
2. Use the trackpad up/down to highlight RADAR SET UP.
3. Press **OK** to select.
4. Use the trackpad up/down to highlight RADAR ADVANCED SET UP. The set up soft keys will be displayed.
5. Press the corresponding soft key for the parameter you wish to adjust. The soft key label is highlighted.
6. Use the rotary control to adjust the parameter value in the box above the soft key.
7. Press **OK** or use the rotary end push to accept the adjustment.
8. Repeat steps 5 through 7 to adjust next parameter.

The new settings will be retained by the display and be used the next time you power up the radar.

## Display timing

The display timing can be affected by the length of cable used to connect the scanner to your C-Series display. This will in turn affect the short range accuracy of the radar. A symptom of incorrect timing is that bridges or piers shown on the picture appear to be bowed i.e.

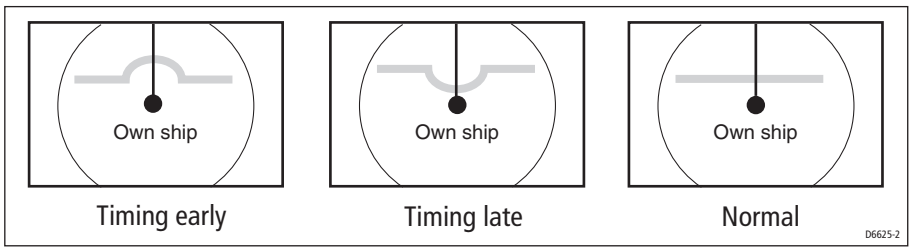


To check the display timing:

1. Use the RANGE button to select the 1/8 nm scale.
2. On the radar picture locate a straight dock, seawall or bridge that is facing your boat. If the image is bent or bowed, the display timing will need adjustment

Under certain circumstances, it may be easier to adjust the display timing with Main Bang Suppression (MBS) OFF.

**Note:** *MBS is reset to ON automatically when you finish adjusting the display timing.*

# Chapter 5: Troubleshooting

## Introduction

This chapter provides information on troubleshooting your Raymarine C-Series Display at installation, and how to get assistance from Raymarine.

## 5.1 How can I troubleshoot my Display?

All Raymarine products are, prior to packing and shipping, subjected to comprehensive test and quality assurance programs. However, if you cannot successfully instal your Display unit, this section will help you to identify the most likely cause and show the corrective action required.

If, after referring to this section, you are still having problems with your Display, contact your local dealer, national distributor or Raymarine Technical Services Department for further advice. Always quote the product serial numbers which are printed on the back of each unit.

| **Installation problem**<br>Solution |
|---|
| **Display does not power up**<br>• Check power supply cable is sound and that all connections are tight and free from corrosion.<br>• Check relevant fuses.<br>• Check power source is of the correct voltage and sufficient current. |
| **My display switches off**<br>• Check power input connection is secure at the rear of the Display(s).<br>• Check power cable for damage or corrosion.<br>• Check your boat's power supply for faulty connections or insufficient cable diameter. |
| **How do I upgrade my Display software?**<br>Visit www.raymarine.com and click on Support to download the latest software. Follow the instructions included with these downloads. |
| **How do I reset my display?**<br>Via the system setup menu. For details refer to your reference manual (*page 194*). |
| **Display very dull/hard to view**<br>• Check PALETTE set to DAY (see *page 16* of the Reference Manual).<br>• Check backlight level (see *page 16*). |
| **No fix displayed against GPS status icon**<br>• Check GPS status (see).<br>• Check the GPS antenna has a clear view of the sky.<br>• Check connections/operation of the GPS antenna. |
| **No instrument navigational data displayed**<br>• Check instruments are operating correctly.<br>• Check SeaTalk/NMEA correctly connected to Display (see System Integration chapter of the Installation Guide).<br>• Check all SeaTalk/NMEA cables are free from damage and corrosion. |

## 5.2 Technical Support

Raymarine provides a comprehensive customer support service, on the world wide web, through our worldwide dealer network and by telephone help line. If you are unable to resolve a problem, please use any of these facilities to obtain additional help.

### World wide web

Please visit the Customer Support area of our website at: **www.raymarine.com/support**

For fastest support - 24 hours a day, seven days a week; go to the Frequently Asked Questions section. Most questions are answered here.

The website will also give you servicing information, e-mail access to the Raymarine Technical Support Department and details of the locations of Raymarine agents, worldwide.

If you don't have access to the world wide web, contact Technical Support where specialists are available to answer questions about installing, operating and trouble-shooting all Raymarine products.

### Help us to help you

When requesting service, please quote the following product information:

- Equipment type.
- Model number.
- Serial number.
- Software issue number

To access this information:

1. Press **MENU.**
2. Highlight and select System Diagnostics.
3. Highlight and select Software Services**.**
4. Highlight and select Unit Info: Software Details screen is displayed giving full details of your particular unit together with its software.

## Contacting Raymarine in the US

You can contact Raymarine in the US either using the Raymarine world wide web as detailed above or by calling one of the telephone numbers below.

### Accessories and parts

You can obtain many Raymarine accessories and parts directly from your authorized Raymarine dealer. However, if your dealer does not have the item you want, contact Raymarine Technical Services at:

1-800-539-5539 extension 2333, or

(603) - 881 - 5200

You can use these numbers Monday through Friday 0815to 1700 Eastern Standard Time or Eastern Daylight Savings Time.

If you are not sure which item is appropriate for your unit, you should first contact the Technical Support Department at:

1-800-539-5539 extension 2444, or

(603)-881 -5200

to verify your requirements.

### Product repair and service

In the unlikely event that your Raymarine unit should develop a problem, contact your authorized Raymarine dealer for assistance. The dealer is best equipped to handle your service requirements and can offer timesaving help in getting your equipment back into normal operation.

If repairs cannot be obtained conveniently, obtain product service by returning the unit to:

Raymarine Product Repair Center

21 Manchester Street,

Merrimack

NH 03054-4801

The Product Repair Center is open Monday through Friday 0815 to 1700 Eastern Standard Time or Eastern Daylight Savings Time.